FilterFuse™ Low Cost Input Filter/Fuse Configuration

- **D1/D2, L1, C1 and the input AC line capacitance form the input pi filter**
  - L1 can also act as a fuse element
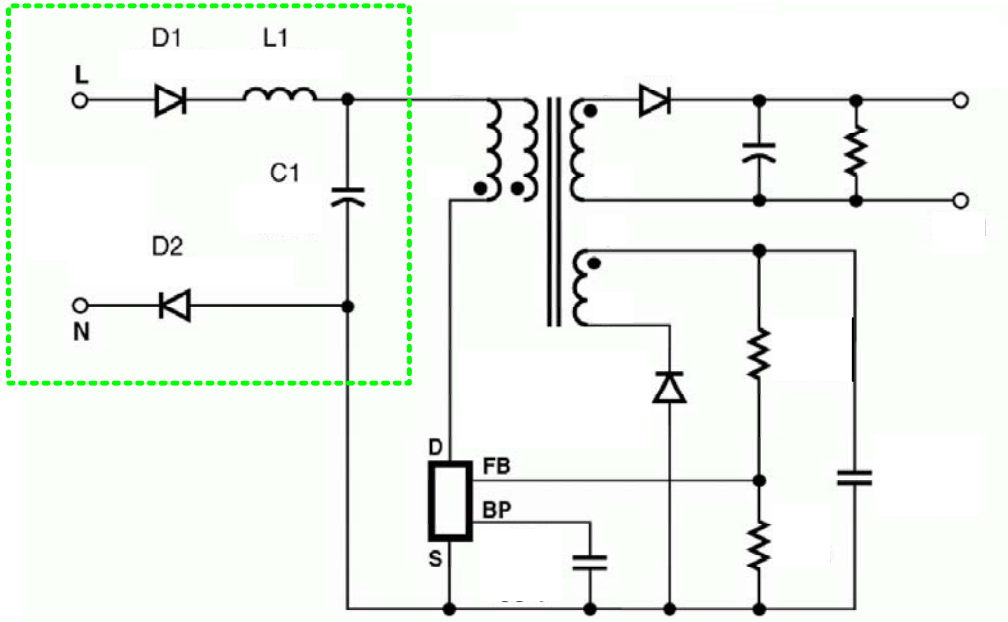
- **Saves >$0.06 over traditional pi filter input stage which requires two electrolytic bulk capacitors and separate fuse/fusible resistor**